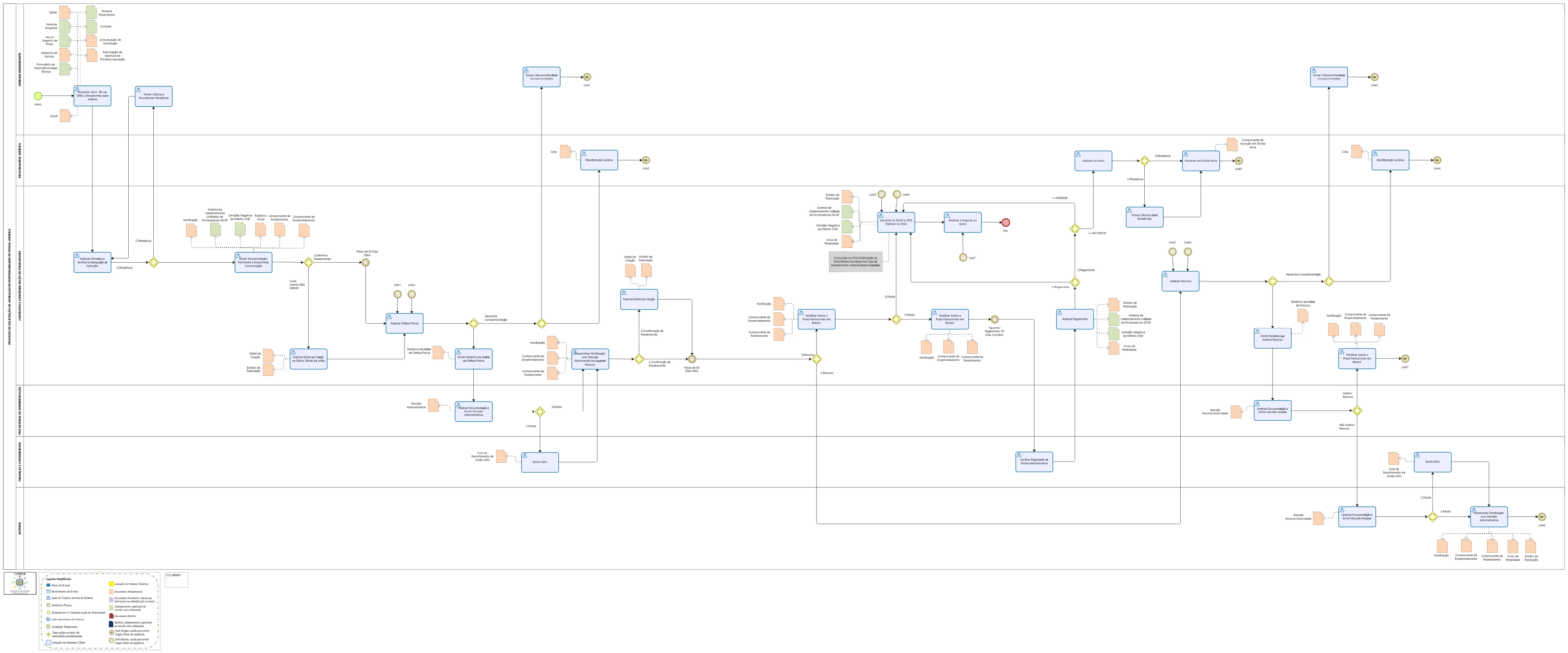

Powered by